Type 4763 Electropneumatic Positioner
Type 4765 Pneumatic Positioner

Application

Single-acting positioners for attachment to pneumatic control valves. These positioners use an electric input signal from 0/4 to 20 mA or 1 to 5 mA (Type 4763) or a pneumatic input signal from 0.2 to 1 bar (3 to 15 psi) (Type 4765).

Rated travels from 7.5 to 90 mm

CE Ex certified

The positioners ensure a predetermined assignment of the valve position (controlled variable x) to the input signal (reference variable w). They compare the input signal received from a control system to the travel of the control valve and issue a corresponding output signal pressure p_{st} (output variable y).

Special features

- Compact, low-maintenance design
- Any mounting position possible
- Insusceptible to mechanical vibrations
- Reversible direction of action
- Excellent dynamic behavior
- Suitable for normal or split-range operation
- Adjustable proportional band (P-band)
- Adjustable air output capacity
- Low air consumption

Attachment to valves with cast yokes or rod-type yokes according to IEC 60534-6

Optionally available with two pressure gauges to monitor supply air and signal pressure. Stainless steel pressure gauge housing with connections either nickel-plated or made of stainless steel.

A Type 4765 Pneumatic Positioner can be upgraded to a Type 4732 Electropneumatic Positioner. [1)]

Versions

Type 4763-0 (Fig. 1) · Electropneumatic positioner, without explosion protection

Type 4763-1 · Electropneumatic positioner for hazardous areas

Input circuit Ⓔx II 2G Ex ia IIC T6 Gb according to ATEX

Type 4763-8 · Electropneumatic positioner in in Ex nA (non-sparking)

Type 4765/6116 (Fig. 3) · Electropneumatic positioner with type of protection "Flameproof enclosure" Ex d with Type 6116 i/p Converter (Fig. 2; see ▶ T 6116 for explosion protection certificates)

Type 4765 (Fig. 1) · Pneumatic positioner with 0.2 to 1 bar (3 to 15 psi) reference variable

1) Does not apply to the version for oxygen (Type 4765)

Fig. 1: *Type 4763/Type 4765 Positioner*

Fig. 2: *Type 6116 i/p Converter, opened housing*

Fig. 3: *Type 4765/6116 Ex d Positioner Attachment to NAMUR rib*

Principle of operation

The only difference between the Type 4765 Pneumatic Positioner and the Type 4763 Electropneumatic Positioner is the electropneumatic (i/p) converter unit in the electropneumatic positioner to convert the electric signal from the controller into a proportional pneumatic signal.

The positioners use a flapper-nozzle system which operates according to the force-balance principle. They can be applied for both normal and split-range operation.

Direction of action

When the reference variable increases, the signal pressure can be selected to be increasing/increasing (direct action >>) or increasing/decreasing (reverse action <>). The direction of action depends on the position of the nozzle assembly that can be turned by 180°. The visible marking (>> or <>) indicates which direction of action is effective. On changing the direction of action or the fail-safe position, note that the positioner must also be mounted in a different position (Fig. 5 to Fig. 8).

Attachment according to IEC 60534-6 and NAMUR

The various ways in which the positioner can be attached to the actuator meet the requirements of IEC 60534-6 and NAMUR recommendation. Positioners may be attached to valves with either cast yokes (e.g. SAMSON Series 240) or rod-type yokes.

Each type of attachment requires special mounting parts.

Assignment of the positioner and the actuator

Fig. 5 to Fig. 8 schematically illustrate the arrangement of the actuator, mounting position of the positioner, reference variable, and direction of action.

Fail-safe position

The Type 3271 and Type 3277 Pneumatic Actuators are available with the following fail-safe actions which become effective when the pressure is relieved from the diaphragm or the air supply fails:

Actuator stem extends (Fig. 5/Fig. 6)
The compression springs in the actuator force the actuator stem to extend when the pressure acting on the diaphragm decreases or upon air supply failure.

Actuator stem retracts (Fig. 7/Fig. 8)
The compression springs in the actuator force the actuator stem to retract when the pressure acting on the diaphragm decreases or upon air supply failure.

Refer to Data Sheets ▶ T 8310-1 and ▶ T 8310-2 for more details.

Fig. 5 to Fig. 8 illustrate the different directions of action and the mounting positions of the positioner. Right and left attachment apply when looking onto the lever (1) and plate (2).

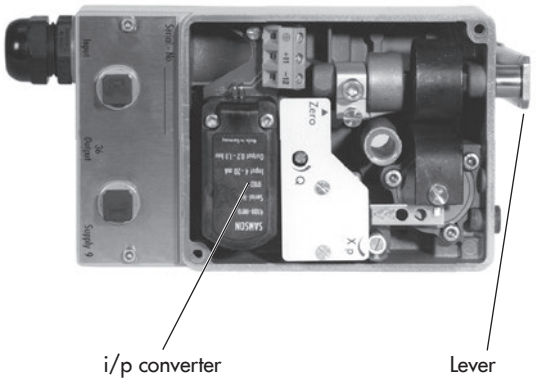

Fig. 4: *Type 4763 Positioner*

Actuator stem extends

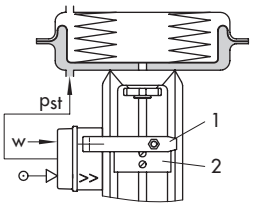

Fig. 5: *Direction of action >>*
Left attachment

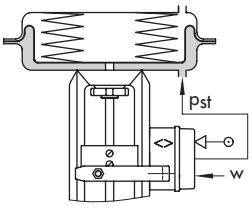

Fig. 6: *Direction of action <>*
Right attachment

Actuator stem retracts

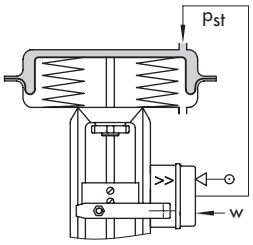

Fig. 7: *Direction of action >>*
Left attachment

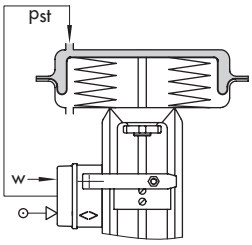

Fig. 8: *Direction of action <>*
Right attachment

Table 1: *Technical data · Type 4765 Pneumatic Positioner*

Type 4765	
Controlled variable (travel range)	7.5 to 60 mm, With lever extension: 7.5 to 90 mm
Reference variable	0.2 to 1 bar (3 to 15 psi)
Split-range 0 to 50 % or 50 to 100 % reference variable span (up to 50 mm travel)	0.2 to 0.6 bar (3 to 9 psi) and 0.6 to 1 bar (9 to 15 psi)
Range spring	See Table 3 on page 5 for selection
Supply air	Supply air: 1.4 to 6 bar (20 to 90 psi) Air quality acc. to ISO 8573-1: Max. particle size and density: Class 4 Oil content: Class 3 · Pressure dew point: Class 3
Signal pressure p_{st} (output)	Max. 0 to 6.0 bar (0 to 90 psi)
Characteristic	Linear characteristic Deviation from characteristic according to terminal point method ≤ 1.5 %
Hysteresis	< 0.5 %
Sensitivity	< 0.1 %
Direction of action	Reversible
Proportional band Xp (at 1.4 bar supply air)	1 to 3.0 % with spring 1 1 to 2.0 % with spring 2 1 to 1.5 % with spring 3
Air consumption in steady state, Xp = 1 %	With 1.4 bar supply air: 0.13 m_n^3/h With 6 bar supply air: 0.33 m_n^3/h
Air output	At Δp 1.4 bar: 3.0 m_n^3/h At Δp 6 bar: 8.5 m_n^3/h
Transit time with Type 3271 Actuator, "stem extends"	240 cm^2 ≤ 1.8 s 350 cm^2 ≤ 2.5 s 700 cm^2 ≤ 10 s
Permissible ambient temperature [1), 2)]	–20 to +80 °C
Influences	Temperature: < 0.02 %/1 K Supply air: < 0.20 %/0.1 bar Variable position when turned by 180°: < 3.50 %
Degree of protection	IP 54 · Venting over check valve (1790-7408): IP 65
Compliance	EAC
Weight	Approx. 1.1 kg
Materials	Housing: die-cast aluminum, chromated, and plastic coated External parts: stainless steel

1) Extended temperature range on request
2) With special version suitable for oxygen up to maximum +60 °C

Table 2: *Technical data · Type 4763 Electropneumatic Positioner*

Type 4763	
Controlled variable (travel range)	7.5 to 60 mm, with lever extension: 7.5 to 90 mm
Reference variable [1)] Split-range 0 to 50 % or 50 to 100 % reference variable span (up to 50 mm travel)	4 to 20 mA (Ex), R_i = 250 Ω [2)] 4 to 20 mA (without explosion protection), R_i = 200 Ω [2)] 0 to 20 mA, R_i = 200 Ω [2)] 1 to 5 mA, R_i = 880 Ω [2)]
Range spring	See Table 3 on page 5 for selection
Supply air	Supply air: 1.4 to 6 bar (20 to 90 psi) Air quality acc. to ISO 8573-1: Max. particle size and density: Class 4 Oil content: Class 3 · Pressure dew point: Class 3
Signal pressure p_{st} (output)	Max. 0 to 6.0 bar (0 to 90 psi)
Characteristic	Linear characteristic Deviation from characteristic according to terminal point method ≤ 1.5 %
Hysteresis	< 0.5 %
Sensitivity	< 0.1 %
Direction of action	Reversible
Proportional band Xp (at 1.4 bar supply air)	1 to 3.0 % with spring 1 1 to 2.0 % with spring 2 1 to 1.5 % with spring 3
Air consumption in steady state, Xp = 1 %	With 1.4 bar supply air: 0.19 m_n^3/h With 6 bar supply air: 0.5 m_n^3/h
Air output	At Δp 1.4 bar: 3.0 m_n^3/h At Δp 6 bar: 8.5 m_n^3/h
Transit time with Type 3271 Actuator, "stem extends"	240 cm² ≤ 1.8 s 350 cm² ≤ 2.5 s 700 cm² ≤ 10.0 s
Permissible ambient temperature [3), 4)]	**With Type 6109 i/p Converter:** –20 to +70 °C –35 to +70 °C (metal cable gland) **With Type 6112 i/p Converter:** –20 to +80 °C –40 to +80 °C (metal cable gland) –45 to +80 °C (special version)
Influences	Temperature: < 0.03 %/1 K Supply air: < 0.3 %/0.1 bar Vibrations: < 2 % between 10 up to 150 Hz and 4 g Variable position when turned by 180°: < 3.5 %
Degree of protection	IP 54 · Venting over check valve (1790-7408): IP 65
Compliance	CE · EAC
Electromagnetic compatibility	Complying with EN 61000-6-2, EN 61000-6-3 and EN 61326-1
Weight	Approx. 1.2 kg
Materials	Housing: die-cast aluminum, chromated, and plastic coated External parts: stainless steel

1) The data listed in the certificate of conformity applies to the version with type of protection Ex ia IIC.
2) R_i = Coil resistance (at approx. 20 °C) ± 7 % tolerance
3) Observe the limits in the certificate of conformity for explosion-protected versions.
4) With special version suitable for oxygen up to maximum +60 °C

Table 3: *Assignment of lever and range spring*

Lever	Rated travel	Min./max. travel	Reference variable (input signal)	Range spring
Lever length L: 40 to 127 mm	15 mm	7.5 to 15 mm	100 % 50 %	1 2
	30 mm	14 to 32 mm	100 % 50 %	2 3
	60 mm	30 to 70 mm	100 %	3
Lever length L with extension: 40 to 200 mm	20 mm	7.5 to 26 mm	100 % 50 %	1 2
	40 mm	14 to 50 mm	100 % 50 %	2 3
	>60 mm	30 to 90 mm	100 %	3

Table 4: *Summary of explosion protection approvals*

Type	Certification			Type of protection/comments
4763-1	EC type examination certificate	Number Date	PTB 02 ATEX 2078 2002-07-19	II 2G Ex ia IIC T6 Gb
	EAC Ex	Number Date Valid until	RU C DE.08.00697 2014-12-15 2019-12-14	1Ex ia IIC T6/T5/T4 Gb X
4763-3	CSA	Number Date	1607873 2005-09-16	Ex ia IIC T6; Class I, Zone 0 Class I, II, Div. 1, Groups A, B, C, D, E, F, G Class I, II, Div. 2, Groups A, B, C, D, E, F, G
	FM APPROVED	Number Date	3020228 2005-02-28	Class I, Zone 0 AEx ia IIC Class I, II, III, Div. 1, Groups A, B, C, D, E, F, G Class I, Div. 2, Groups A, B, C, D Class II, Div. 2 Groups F, G; Class III
4763-7	JIS	Number Date Valid until	TC14411 2015-02-09 2018-03-01	Ex ia IIC T6
4763-8	Statement of conformity	Number Date	PTB 03 ATEX 2183 X 2003-09-30	II 3G Ex nA ic IIC T6 Gc
	EAC Ex	Number Date Valid until	RU C DE.08.00697 2014-12-15 2019-12-14	2Ex nA IIC T6/T5/T4 Gc X

Article code of Type 4763

Electropneumatic positioner	Type 4763-	x	1	x	x	x	x	x	x	x	0	x	0	x	x
Explosion protection [1]															
Without		0													
Intrinsic safety: **ATEX, GOST**		1													
Intrinsic safety: **CSA, FM**		3													
Intrinsic safety: **JIS**		7													
Non-sparking equipment: **ATEX, GOST**		8													
Spring															
Spring 1, travel = 15 mm				1											
Spring 2, travel = 30 mm, split range 15 mm				2											
Spring 3, travel = 60 mm, split range 30 mm				3											
Body version															
Standard					0	0									
JIS version					2	0									
Pneumatic connections															
ISO 228–1 G ¼							1								
¼-18 NPT							3								
ISO 7/1–Rc ¼							4								
Electrical connection (cable gland)															
ISO 228–1 G ½								0							
M20 x 1.5 blue (plastic)								1							
M20 x 1.5 black (plastic)								2							
M20 x 1.5 blue (metal)								6							
M20 x 1.5 (nickel-plated brass)								7							
i/p converter module															
Type 6109									1						
Type 6112									2						
Reference variable															
4 to 20 mA										0					
0 to 20 mA										2					
1 to 5 mA										3					
Temperature range															
Standard												0			
Low temperature down to –45 °C												2			
Special version															
Without													0	0	0
GOST-EAC certificate; IP 66 up to –30 °C													0	0	9
GOST-EAC certificate; IP 66 up to –45 °C													0	1	0
Reference variable 0 to 5 mA													0	1	1
For oxygen [2]													0	1	6
Nameplate (metal)													0	1	7

[1] See Table 4 for details on explosion protection certificates.
[2] Special version suitable for oxygen up to maximum +60 °C (according to AIR LIQUIDE test report no. 2014/R 171a1)

Article code of Type 4765

Pneumatic positioner	Type 4765-	0	1	x	0	0	x	1	x	x	x	x	0
Spring													
Spring 1, travel = 15 mm				1									
Spring 2, travel = 30 mm, split range 15 mm				2									
Spring 3, travel = 60 mm, split range 30 mm				3									
Pneumatic connections													
ISO 228/1 G ¼							1						
¼-18 NPT							3						
Temperature range													
Standard									0				
Low temperature down to –50 °C									1				
Special version													
Without										0	0	0	
For oxygen [1]										0	1	6	

[1] Special version suitable for oxygen up to maximum +60 °C (according to AIR LIQUIDE test report no. 2014/R 171a1)

Electrical connection and dimensions in mm

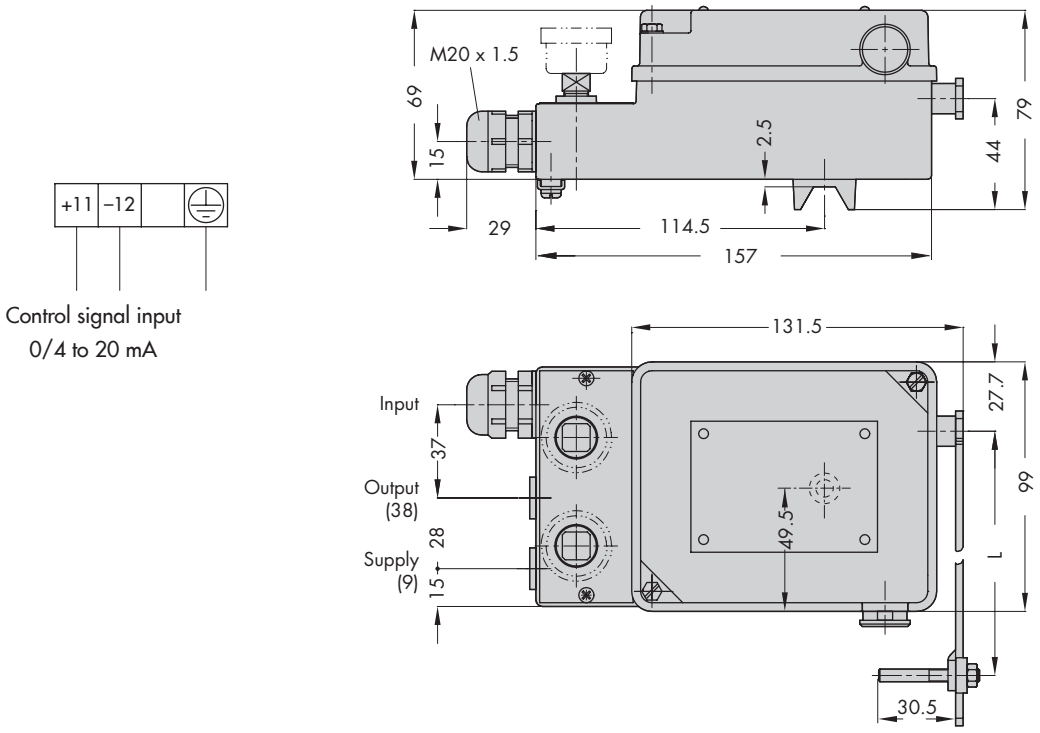

Ordering text

Type 4763-x... Electropneumatic Positioner
or
Type 4765-01... Pneumatic Positioner

Additional specifications

- Without/with pressure gauges
- CrNiMo steel pressure gauge housing, connection nickel-plated or completely of CrNiMo steel for mounting onto control valve
- Reference variable adjusted ... or supply pressure ... bar
- Direction of action: increasing/increasing or increasing/decreasing
- Piping: Zinc-coated steel or completely of CrNiMo steel or natural PE tubing DN 6/10
- Attachment according to IEC 60534-6 (NAMUR)
  Travel: ... mm, if applicable, rod diameter: …mm
  Optionally, special version
- Extended temperature range

Refer to the following mounting and operating instructions concerning the mounting parts required when the positioner is delivered separately and not mounted onto a control valve:

- Type 4765: ▶ EB 8359-1
- Type 4763: ▶ EB 8359-2

Specifications subject to change without notice

SAMSON AG · MESS- UND REGELTECHNIK
Weismüllerstraße 3 · 60314 Frankfurt am Main, Germany
Phone: +49 69 4009-0 · Fax: +49 69 4009-1507
samson@samson.de · www.samson.de

2016-05-10 · English